MECHANICAL SEALS PUMP

AP19

Flowrate
12.5 m^3/h

Total Head
17.5 m

Power
1100 W

Horizontal mechanical seal pump for transferring non-corrosive fluids

WARNING
CORROSIVE LIQUIDS PROHIBITED

APPLICATIONS

Viscous fluids

Dense fluids

Bath transfer

Circulation in ion exchange resin / activated carbon

ADVANTAGES

Protection strainer

Self-repriming

Great efficiency

Economic pump

Pumping of viscous fluids up to 15 cSt.

Lifting of effluents up to 17 meters high

CONNECTION

Union nut

SPECIFICATION

Hydraulic performances	
Max flow rate (m^3/h)	12.5
Total head (m)	17.5
Max temperature (°C)	75
Density	15 cSt

Motor	
Standard	IE3
Power supply (V)	230 Single-phase or 230/400 Three-phase
Power (W)	1100
Frequency (Hz)	50 - 60
Rotation speed (rpm)	3000 - 3600

Design	
Technology	Mechanical seals
Available materials	Polypropylene (PP) 316L
Seals	Carbide/Carbide
Gaskets	NBR (PP)

FT_SI_A-SERIES_AP19_EN

SIEBEC SAS contact@siebec.com
SIEBEC Ltd sales@siebec.co.uk
SIEBEC S.L. ventas@siebec.com
SIEBEC SRL commerciale@siebec.com
SIEBEC GmbH info@siebec.de
SIEBEC LDA info.pt@siebec.com

We are here to help.
Contact us!

DIMENSIONS

Units : mm

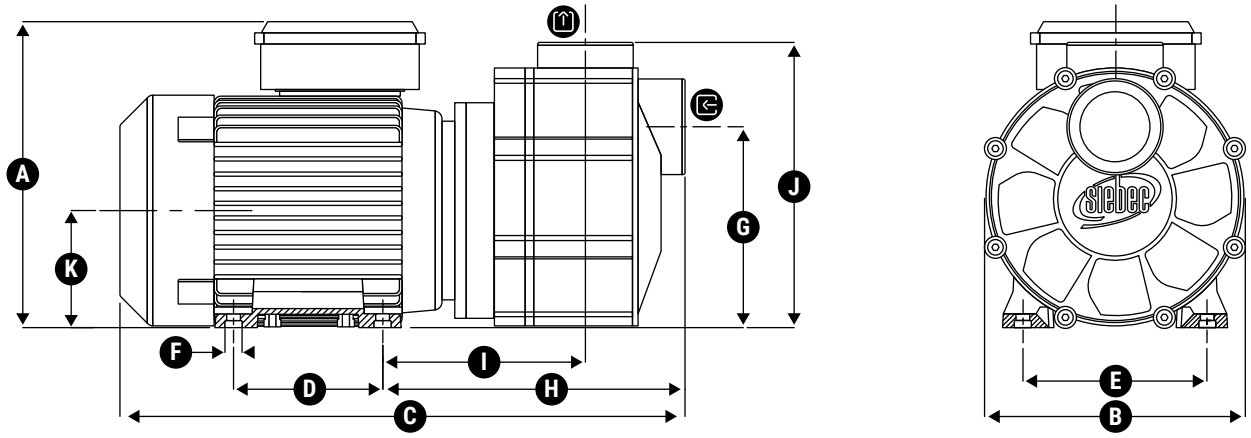

Outline dimensions			Fixation			Inlet / Outlet					
A	B	C	D	E	F	G	H	I	J	K	L
198	176	394	100	125	Ø9 (x4)	137	254	137	195	-	-

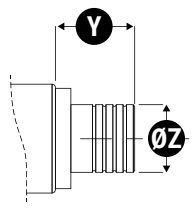

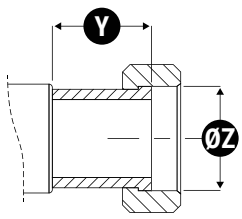

UNION NUT

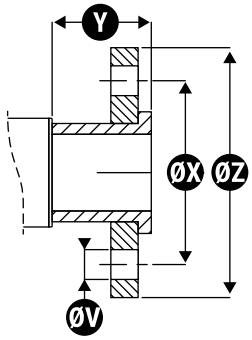

			Union nut					
	Y	Z	Y	Z	Y	Z	X	V
Entrée	-	-	-	G2"1/4	-	-	-	-
Sortie	-	-	-	G2"	-	-	-	-

FT_SI_A-SERIES_AP19_EN

SIEBEC SAS
contact@siebec.com
SIEBEC Ltd
sales@siebec.co.uk
SIEBEC S.L.
ventas@siebec.com
SIEBEC SRL
commerciale@siebec.com
SIEBEC GmbH
info@siebec.de
SIEBEC LDA
info.pt@siebec.com

We are here to help.
Contact us!

FLOWRATE CHARTS

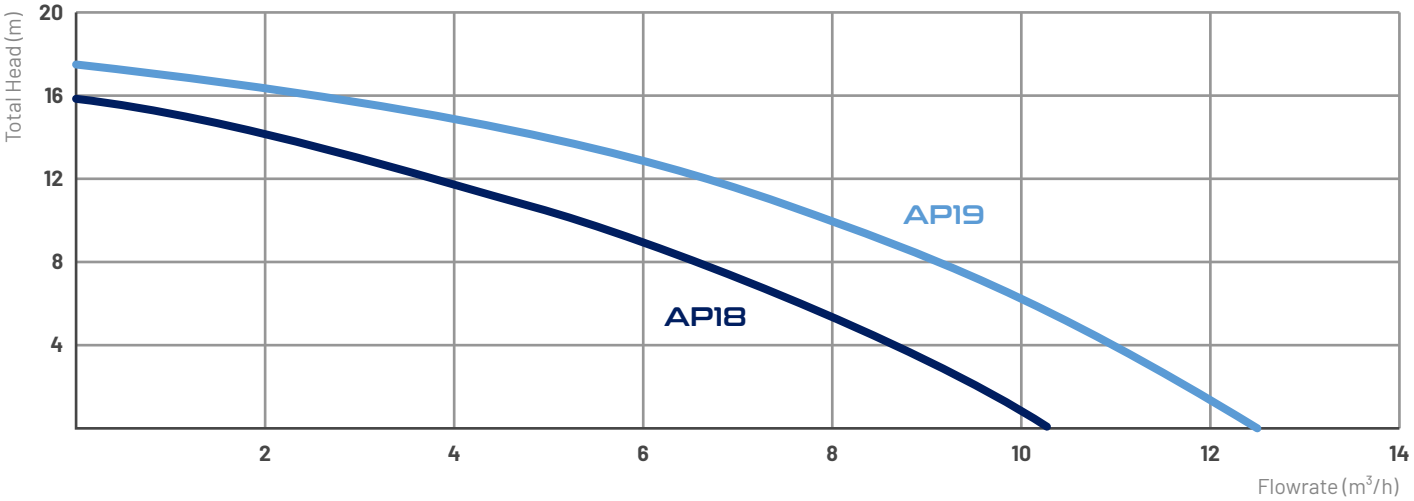

FT_SI_A-SERIES_AP19_EN

MECHANICAL SEALS SIEBEC PUMPS

A SERIES
CORROSIVE LIQUID-COMPATIBLE MODELS

	Flowrate (m^3/h)	Total Head (m)	Power (W)	Density	Power supply (V)
A15	4,8	9	180	< 1.2	230/400 Three-phase
A18	10	18	750	< 1.8	230/400 Three-phase
A19	14	19	1100	< 1.7	230/400 Three-phase
A27	31,5	22	2200	< 1.4	230/400 Three-phase
A30	43	22	4000	< 1.6	230/400 Three-phase
A31P	52	32	5500 (7500*)	< 1,1 (<1,5*)	230/400 Three-phase
A32P	57	41	7500	< 1	230/400 Three-phase
A33P	48	36	5500	< 1,25	230/400 Three-phase
A32	58	46,5	7500	< 1	230/400 Three-phase

*High Density version

WARNING
NON-COMPATIBLE MODELS FOR CORROSIVE LIQUIDS

	Flowrate (m^3/h)	Total Head (m)	Power (W)	Viscosity	Power supply (V)
AP18	10	16	550	15 cSt	230 Single-phase or 230/400 Three-phase
AP19	12.5	17,5	1100	15 cSt	230 Single-phase or 230/400 Three-phase
AP18HP	7,5	24	1100 (de 1 cSt à 45 cSt)	45 cSt	230 Single-phase or 230/400 Three-phase
AP19HP	10	30	1100 pour de l'eau 1500 pour de l'huile jusqu'à 45 cSt	45 cSt	230 Single-phase or 230/400 Three-phase

SIEBEC SAS contact@siebec.com
SIEBEC Ltd sales@siebec.co.uk
SIEBEC S.L. ventas@siebec.com
SIEBEC SRL commerciale@siebec.com
SIEBEC GmbH info@siebec.de
SIEBEC LDA info.pt@siebec.com

We are here to help.
Contact us!